SIDES	BOTTOM

Material:Steel-0.0625″-G60 Galvanized

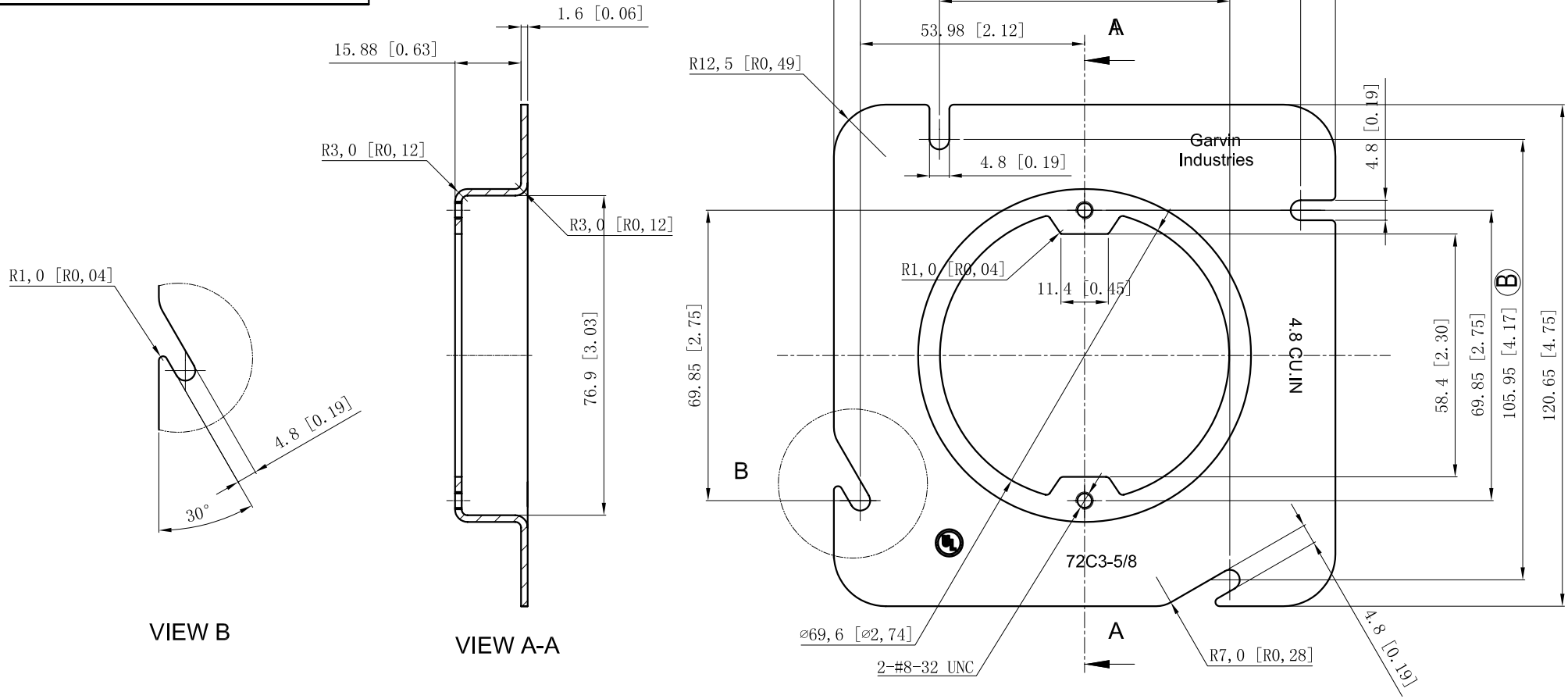

DESCRIPTION

TRADE REFERENCE TERMS

This data sheet is for reference only .GARVIN INDUSTRIES reserves the right to make changes to the design without prior notice.

STANDARD PACKING	GARVIN INDUSTRIES		
25 PCS	TITLE: 4-11/16″SQUARE BOX COVERS		
	SIZE: A4	DWG NO.: 72C3-5/8	REV: B
	DATA SHEET		